Student Science Fair Booklet

TABLE OF CONTENTS

Science Fair Booklet for Students

IMPORTANT TIMES

Date: Thursday, March 1, 2018

Registration Deadline: Friday, February 23, 2018

Location: Central City Mall

Optional Theme: STEM: Science in Action!

Schedule:

4:00 - 5:00pm	Students arrive to register and set up display
5:00 - 7:00pm	Public viewing of projects
5:00 - 7:00pm	Judging of projects
7:00 - 7:30pm	Judges deliver ribbons
7:30 - 8:00pm	Award presentations and clean-up

Science Fair Booklet for Students

TIMELINE CHECKLIST

Instructions:
In brackets ( ), write the date for the Monday of each week.
Check off and record the date as each step is completed.

				[✓]	DATE COMPLETED
Preparing	(January)				
Week 1	(_____)	1.	Read the Rules	[ ]	_____
			Review Judging Criteria	[ ]	_____
		2.	Select a Topic	[ ]	_____
		3.	Select a Category	[ ]	_____
Researching	(January)				
Week 2	(_____)	4.	Begin Research	[ ]	_____
			Begin Experiment	[ ]	_____
Week 3	(_____)	5.	Analyze Experimental Data	[ ]	_____
			Investigate Other Resources	[ ]	_____
Week 4	(_____)	6.	Outline	[ ]	_____
Displaying	(February)				
Week 5	(_____)	7.	Begin Model	[ ]	_____
			Display Layout	[ ]	_____
		8.	Building the Display	[ ]	_____
Week 6	(_____)	9.	Titles and Lettering	[ ]	_____
		10.	Practice Your Talk	[ ]	_____
Presenting	(February/March)				
Week 7	(_____)		Class Fair this week	[ ]	_____
Week 8	(_____)		School Fair this week	[ ]	_____
Week 9	(_____)		District Fair this week	[ ]	_____

DATES TO REMEMBER:

Our class Fair	_____
Our school Fair	_____
District Fair (at Central City Mall)	March 1, 2018
South Fraser Regional Fair Entry Deadline	March 15, 2018
South Fraser Regional Fair (at KPU Surrey Campus)	April 20 & 21, 2018

Science Fair Booklet for Students

PREPARING – Week 1

1. **Read the Rules**
   Review Judging Criteria
   The **District Science Fair Booklet** has detailed rules for the District Science Fair and a sample judging form that explains what judges will be looking for in your project. Ask your teacher for a copy of the rules and judging form. Read the rules and judging criteria carefully and keep them in mind as you plan your project.

2. **Select a Topic**
   Think of something that you might have always wondered about. Sometimes it is easier to think back to when you were younger and had those "silly" questions.
   Talk about it with a friend or someone at home.
   It can all start with asking "What if…?"

   The next few pages of this booklet will give you some help in choosing a project:
   - Project Planning Guide
   - Webbing
   - Past Project Ideas

Science Fair Booklet for Students

PROJECT PLANNING GUIDE

Things That Interest Me:

1._____

2. _____

3. _____

4. _____

Science Area I Like Best:

- Life Science
- Earth Science
- Space Science
- Physical Science

What type of project would interest me the most (See Category Descriptions):

- Experimental
- Demonstration
- Inventions
- Working Model
- Static Model
- Regional (see your teacher for more information)

Possible Topics:

1. _____

Materials I already have:

Materials I would have to buy:

Help I will need with this topic: None _____ Some _____ A lot _____

How difficult will this be for me? Very _____ Somewhat _____ Easy _____

2. _____

Materials I already have:

Materials I would have to buy:

Help I will need with this topic: None _____ Some _____ A lot _____

How difficult will this be for me? Very _____ Somewhat _____ Easy _____

3. _____

Materials I already have:

Materials I would have to buy:

Help I will need with this topic: None _____ Some _____ A lot _____

How difficult will this be for me? Very _____ Somewhat _____ Easy _____

Science Fair Booklet for Students

PROJECT PLANNING GUIDE

Questions/Problems to Explore
Some questions about my topic I want to find answers to:

1.

2.

3.

4.

5.

Conducting Research
Printed, audiovisual and electronic materials I should find and read:

1.

2.

3.

4.

5.

6.

Places I could visit:

1.

2.

3.

People I could talk to:

1.

2.

3.

Science Fair Booklet for Students

WEBBING

Webbing is a useful way to get started by **identifying** and **selecting** a science fair topic.

Here's how someone might web a subject about ***Water Systems***.

1. Think of a general topic and put it in the middle of a large piece of paper.

2. Now think of a few (4 - 5) questions about your topic. These questions could be ones that you would like to find the answers to or you may already know the answers.

   - What are the different parts of a water system?
   - Where does my water come from?
   - How do people in other parts of the world get their water?
   - How can dirty water be cleaned?

3. Put your questions on the paper around your general topic like this:

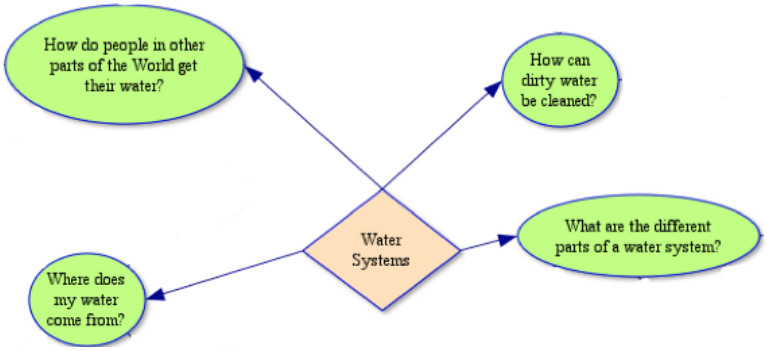

Science Fair Booklet for Students

WEBBING

4. Look at each of the questions and answer them or make up new questions. Don't worry about your answers or ideas being correct or good ones. You want to think of as many different ideas as you can.

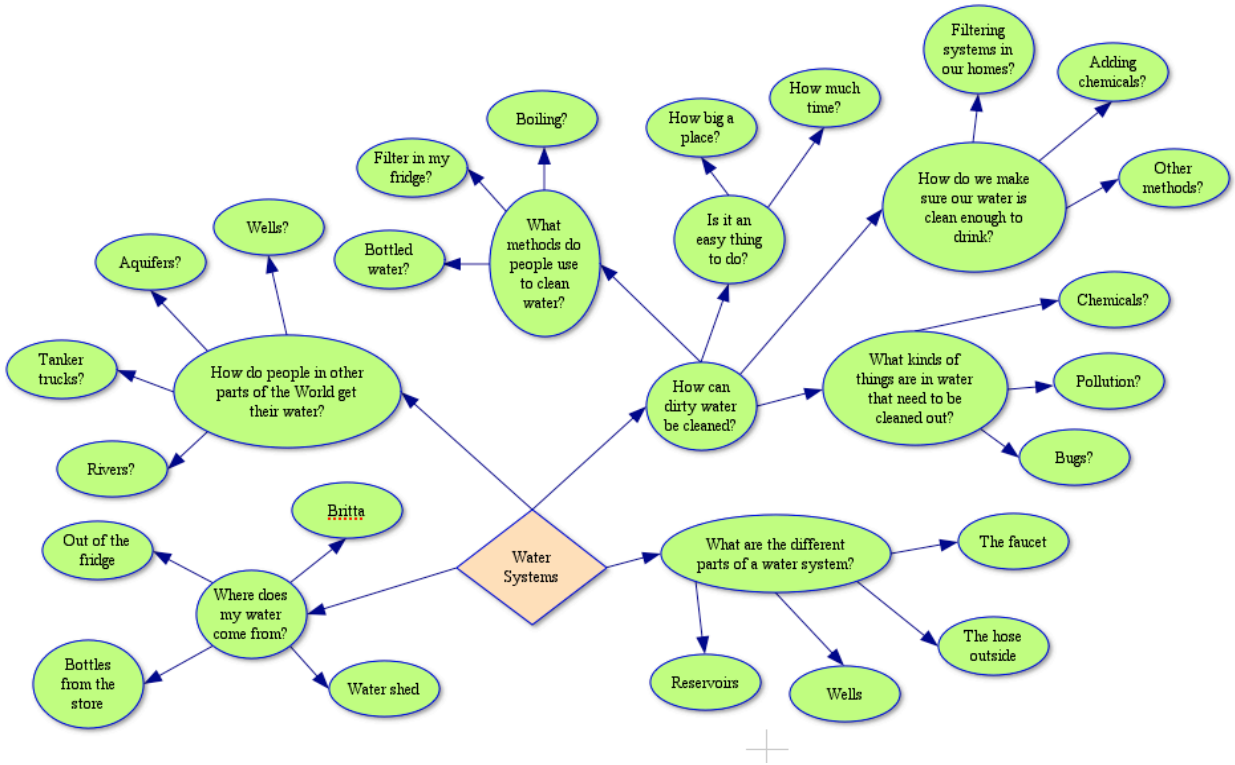

5. When you have gone as far as you can, stop and read the web over again. Somewhere on the page is an interesting idea that you can develop into a project. **LOOK CAREFULLY.**

   Water Systems . . . How can dirty water be cleaned?
   An experiment to determine the most efficient way to clean water. That's it!

Science Fair Booklet for Students

PAST PROJECT IDEAS

Experiments

- Oil Spills
- Paper Airplanes
- Are Other Gases Heavier than Air?
- Separating Salt
- Fats, Starch & Vitamin C
- Conductivity of Salt & Fresh Water
- Popcorn Mystery
- Carbon Dioxide
- Which Pop Has the Most Citric Acid?

Demonstrations

- Radios
- The Heart
- Oxidation
- Optical Illusions
- Electrolysis of Water
- Electricity
- Solar Energy
- Laser Eye Surgery
- In Your Dreams

Static Models

- How Car Engines Work
- The Cycle of Waste Management
- Caves - "Come Spelunking"
- Water and Evaporation
- How do dams produce electricity?
- Wind Tunnel
- Pinhole Camera
- Holograms - How are they Made?
- The Body's Filter "The Kidneys"

Working Models

- Geyser
- Hot Air Balloons
- Electricity
- Light
- Wind Mill
- Muscles
- Electric Train
- Buoyancy & Submarine
- Flight

Inventions

- Cookie Dispenser
- Car of the Future
- Nature's Little Helper
- The Hockey Net on Wheels
- The Super Feeder
- How Can Hamsters Feed Themselves?
- A Marble Sorter
- Simple Timer Machine
- The Amazing Toothpaste Squeezer

Science Fair Booklet for Students

PAST PROJECT IDEAS

Here are some questions that may lead to projects that we haven't seen recently at Science Fair.

What is a Wind Tunnel?
How are Fibre Optics Used in Communication?
How is Infrared Light Measured?
How do Air Plants Live?
How do Common Materials Reflect Light?
Does Washing your Hands with Soap Prevent Colds?
Why are Mirrors Such Good Reflectors of Light?
Where Does the Motion in Motion Pictures Come From?
What Causes Mold to Grow on Bread?
Can a Child's Vision be Better Than 20/20?
What are Plate Tectonics?
What are the Solar Winds?
How can We Measure the Amount of Moisture in the Air?
Under Which Color of Light do Pea Plants Grow Best?
How Fast Do Different Fabrics Burn?
Which Paper Towel is Really Most Absorbent?
How did Abraham Gesner Invent Kerosene?
What is the Best Shape for a Propeller?
What is the Best Shape for a Kite?
How Do Some Insects Change as They "Grow Up"?
What Can Be Done to Slow Rusting?
In What Shape Will Paper Support the Most Weight?
How Does Overcrowding Affect Life in a Terrarium?
How Do They Find Planets in Distant Solar Systems?
Are Girls Stronger Than Boys?
What Happens at the Juan de Fuca Plate?
How Do Animals Become Extinct?
What Will Follow After the Space Shuttle?
How Can Homes Become More Energy Efficient?
Why does a cedar canoe float?
What is the environmental impact of traditional paint vs. store-bought paint?
Making Electricity From Wind Power, From Tidal Power
How Do Biodegradable Items Disintegrate?
What is Inertia?
How Hard are Your Teeth?

What is Electrotyping?
How are Caisson Bridge Footings Made?
What is Mononucleosis?
How are Rainbows Created?
How is Sound Obtained from a Phonograph Record?
How Can You Make a Superconductor?
How are We Affected by Dust and Smoke in the Air?
What causes a satellite to stay in orbit?
What are Ways to Correct Poor Vision?
How did Wilfred Bigelow Invent the Pacemaker?
Which Fertilizer is Better?
How do Animals use Camouflage?
How Can a Tomato Plant be Grafted to a Potato Plant?
How Can We Measure the Altitude of Stars and Planets?
What Makes Hovercrafts Hover?
Which Paper Towel is Really the Strongest?
Does the Moon Rise at the Same Time Every Night?
Where Do You Find the Fibonacci Sequence in Nature?
Can Fish See Colour?
How can Christmas Trees be Salvaged?
What is the Golden Ratio?
How can Cars be Made to Cause Less Air Pollution?
What is the Effect of Detergent on the Germination of Bean Seeds?
How Did Early Civilizations use Simple Machines?
What is the Ballard Shale?
How Are We Affected by the Jet Stream?
What is the Ballard Fuel Cell?
What are the Advantages of Hydro Electricity?
What makes a NiCad battery Different Than a Regular Battery?
What are traditional ways of preserving food?
How are baskets made waterproof?
How Is Our Water Purified?
How Are Water Lilies Used in Sewage Treatment?
How Are Levers and Pulley Used?
What Is a Tsunami?

How do you Whistle?
How Does an Electric Arc Heater Work?
What is the Bernoulli effect?
How do Gases and Liquids Mix?
How can Water Boil at Room Temperature?
How can Electricity Create Magnetism?
Why are Multistage Rockets used to Launch Satellites?
Will Eating Protein Make you Feel More Alert?
How Does Oil Come from Canada's Tar Sands?
Which Chewing Gum Holds its Flavor Longest?
How Do Thermometers Work?
How Do Coffee Pots Work?
Nutra Sweet: What is It? What is it In?
What is Meant by Right Brain, Left Brain?
How are School Supplies Made?
Which Detergent Breaks Up Cooking Oil Best?
How Does a Bicycle Test in a Wind Tunnel?
What are Antibiotics from the Seashore?
Were Does Rainwater Go?
What Living Things May be Found in Garden Soil?
How Does a Pulley Work?
How Does Baking Soda Affect the Growth of Plants?
How Does Sound Travel Through Different Materials?
Why Should We be Concerned About the Ozone Layer?
How are Plastics Recycled?
How did they Fix the Hubble Telescope?
Is There a Planet Beyond Pluto?
What Alternate Fuels are Being Used for Vehicles?
Can People Identify Different Kinds of Kool-Aid by Taste Alone?
Why doesn't stripping the cedar bark harm the tree?
How Can the Developing of Films and the Printing of Pictures be Done at
Why are Some Animals Endangered?
What is the Effect of Coke on Heartbeat?
What is Surface Tension?
What is Centrifugal Force?

Science Fair Booklet for Students

PREPARING – Week 1

3. Select a Category

There are several ways to approach any one topic. Before you make up your mind as to what the finished project might look like, you should think about what the best, most interesting or most appropriate presentation might be. The project information will remain the same, but the presentation can be more effective.

Think about your project and answer the following questions. Your answers will determine the project's category. This chart is meant only to provide some guidelines and should not be considered as the "final say". There will always be a few projects which don't seem to clearly fit into the categories as outlined, therefore you will have to use your best judgment to classify them. Please refer to the more detailed descriptions in the **District Science Fair Booklet**. Ask your teacher for a copy.

1. Does this project perform an experiment in order to answer a question?

   Yes **Experiments**

   No

2. Does this project illustrate, explain, prove, or define a basic scientific fact, law, or principle?

   Yes **Demonstrations**

   No

3. If you have a model, does the model really work? (or could it really work if given the proper conditions e.g. sunlight?)

   Yes **Working Models**

   No **Static Models**

4. Did you "invent" all or part of this project?

   Yes **Inventions**

   No

5. Do you plan to go to the South Fraser Regional Science Fair?

   Yes **Regional – Experiments**

   No

Science Fair Booklet for Students

RESEARCHING – Week 2

4. Begin Research

Depending on your situation, the research for Science Fair might be done completely at school, partly at school and some at home, or all at home.

Science Fair time is often one with heavy demands made on the school library, so it is important to discuss with your teacher-librarian well in advance any plans you have and any assistance you will be looking for. And remember to visit the community library. They have science fair materials and are always ready to help.

Use your web and begin to gather the facts for each area. Use a variety of sources such as print, people, and electronic. Take notes in point form, concentrating on the main ideas. When there is enough material the information will be sorted and sequenced. Try to use all the references that are available within the school and at the community library and begin searching for other resources. Perhaps there is an organization or a specialist familiar with the topic who has information to share (see step 5 – Investigate Other Resources).

It is likely that some parts of your web will have some facts that are more easily available than another part of your web. The objective is to make the gathering of information as complete as possible. One area should not be emphasized and another neglected simply because it is simpler to do so. This step is on-going in that the storehouse of information is never completely exhausted therefore the research step will continue throughout the time available.

Begin Experiment

Now that you've chosen your question and proposed a hypothesis, design an experiment to test that hypothesis. If the experiment shows that your hypothesis is correct, your hypothesis then becomes scientific theory. If the experiment does not prove your hypothesis, then your hypothesis must be rejected or modified.

There are three kinds of variables that you need to use in your experiment. They are known as independent, dependent, and control variables.

The independent variable is the variable that you will change intentionally in order to see how it affects the other variable known as the **dependent variable**.

The control variables are variables that are not changed throughout the experiment. All control variables are identical to the original experiment in order to provide a fair test of the relationship between the independent variable and the dependent variable.

For example, if you wanted to test how different fertilizers (**independent variable**) affected the growth of a plant (**dependent variable**), you would need to **control** the amount of sunshine, amount of water, type of soil and size of pot. If these **control variables** remain the same for every test, then you know for sure that any changes in plant growth are because of the fertilizer and not because of one of the other variables.

RESEARCHING – Week 3

5. Analyze Experimental Data

Many scientists find it extremely useful to use tables, charts and graphs to visually represent the data collected from the experiment. One of the easiest ways to do this is to use a computer spreadsheet program (Microsoft Excel or Google Sheets). Displaying data from an experiment with a graph makes it easier to see trends and patterns in the data. The graph presents the data in a visual format that often brings out the significance of the data much more clearly than the data table alone.

For your graph, remember to:

- put your independent variable on the x-axis of your graph
- put your dependent variable on the y-axis of your graph
- be sure to label the axes of your graph and always include the units of measurement (grams, centimeters, liters, etc.).
- set up a numerical scale for each axis and always start the scale at 0
- If you have more than one set of data, show each series in a different color or symbol and include a legend with clear labels.

Take some time to carefully review all of the data you have collected from your experiment. Did you get the results you had expected? What did you find out from your experiment? Really think about what you have discovered and use your data to help you explain why you think certain things happened.

Investigate Other Resources

It is always helpful to use the identification of other resources as a separate step. Brainstorm a list of organizations and individuals that might provide additional assistance. Professionals may be found at universities, museums, nature centres, industries, local businesses, airports, zoos, government agencies, environmental organizations, hospitals, pharmacies, utility companies, and all sorts of other places! Set some timelines to avoid waiting until the last minute to make contact. A written list of questions should be prepared beforehand to ensure you have a clear idea of what is wanted from the contact.

RESEARCHING – Week 4

6. Outline

Refer again to your web of the project. Have any other aspects of your web emerged? Has there been enough information gathered for all parts of your web? With the information now available, how can it be organized for the most effective presentation?

Think about organizing the presentation into between four and six main parts. What are the important points that are to be brought out in each of these parts? What do you want the person looking at the project to understand when they see it? What do you want the person listening to the presentation to understand when they listen to it? Has your main question been answered?

Science Fair Booklet for Students

DISPLAYING – Week 5

7. **Begin Model**
Depending on the topic of the project and the category decided upon, a model of some kind may be appropriate for part of the display. What is the best way in which to present this information? A collection, an example, a demonstration, a working model or a static model should be an integral part of the project, neither secondary to nor of more importance than the display.

Remember that the use of common, ordinary household materials is encouraged, and so displays made of cardboard, paper, string, paper rolls and plastic tubs will show more resourcefulness than one where pieces of specialized equipment have been obtained.

Display Layout
It is often helpful to return to your web once again and decide upon which is the most essential part of the topic and which parts are less important. Use this information to rough out on scrap paper what the display will look like. With careful planning, each section of the web can become one section of the display made separately. These parts can be brought together in the final presentation. In this way changes can be made easily.

Ask questions such as: "How much room is needed for the title?", "Will these parts fit on the wings of the display?" Keep in mind that the display should 'tell the tale' of the project, so organize it in such a way as to make it clear what the focus is. For maximum visual effect, keep the amount of text material to the bare essentials and type or print, not write, all work. The display should be mostly charts, diagrams, graphs, maps, pictures, etc.

Here are some things to think about:

- **Organize** your display. It should tell **"the tale"** of your project and someone should be able to understand your project just by looking at the display.
- Make your project as **neat** as you can.
- Display should not look **cluttered**.
- Make sure all words are **spelled correctly**.
- Make your display **colorful.**
- Don't use **photocopied** pages. Judges want to see your own words.
- Make your display **sturdy** so that it can be moved easily without falling apart.
- Use household **throw-aways** whenever possible. Reuse and Recycle!
- **READ THE RULES AGAIN! Look at the judging criteria.** Remember how important both the rules and the criteria are for creating your presentation.
- Give yourself lots of time -- two weeks or even more to build your display. You can't make a quality display overnight.

Science Fair Booklet for Students

DISPLAYING – Week 5

8. Building the Display

Below are a few ideas and tips on how to make your Science Fair project display self-supporting. These are not the only ways of making your charts stand up, but they are easily made. Here are a few tips:

- Use heavy corrugated cardboard or plastic for the back of the display. Ask for old packing boxes at appliance or department stores. Old real estate "for sale" signs work.
- Your whole project, including the charts, must be within a space of **1 metre** wide**, 1.2 metres** high and **60 centimetres** deep.
- The display should be **sturdy**. You will be putting up and taking down the display plus moving it many times so it must be able to stay together.
- You should be able to "bump into" your display without having it fall down. Accidental bumpings do occur and your project should be able to withstand them.
- The cost of anything used in making your display must be added to the project cost. (Display board cost is exempt.)

a) <u>Single Board Display</u>

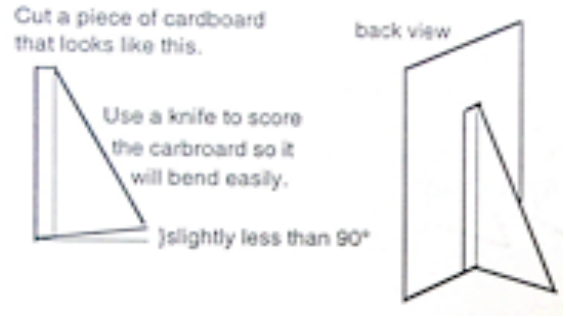

b) <u>Traditional Display</u>

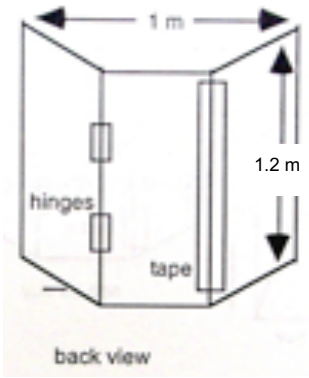

3) <u>A Self-contained Project</u>

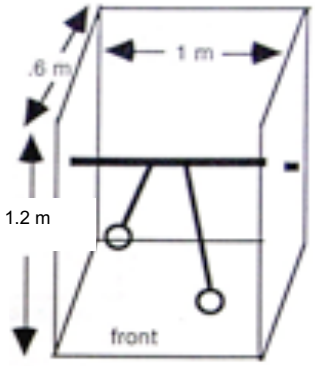

Science Fair Booklet for Students

DISPLAYING – Week 6

9. Titles and Lettering

Bold, clear titles help people understand what your project is about and what ideas are the most important. Your titles and your lettering should be neat and colorful. Use underlining and borders to make information stand out. Cut construction paper or use thick felt pens to make large letters.

10. Practice Your Talk

At the Science Fair, you will be asked to explain your project to the judges and to the public. Your presentation to the judges should be clear, to the point and about 2 to 3 minutes long. Ask yourself, "What must the judge understand about my project?" Think of only the most important things to tell the judges. **Practice** your presentation to your parents, relatives and friends so that you feel **confident** when talking at the Science Fair. The judges will also be asking **questions** about the display so have your friends ask you some questions for practice.

The judges put as much if not more emphasis on your oral presentation as your visual display so your ability to answer their questions is very important.